CABLE OPERATE EASILY

ONE BUTTON OPERATION

VIDEO & PHOTO

HD CAMERA

NIGHT VISION

HD PIPE CAMERA

One-key power on/off/video
HD camera / Night vision

ONE BUTTON OPERATION

HD CAMERA

VIDEO & PHOTO

NIGHT VISION

HD CAMERA

With photo/video recording

HD PIPE ENDOSCOPE

HD 1280*720 RECORDER

True high definition, the inside of the tube is visiable

ONE BUTTON OPERATION

HD CAMERA

VIDEO & PHOTO

NIGHT VISION

HD PIPE CAMERA

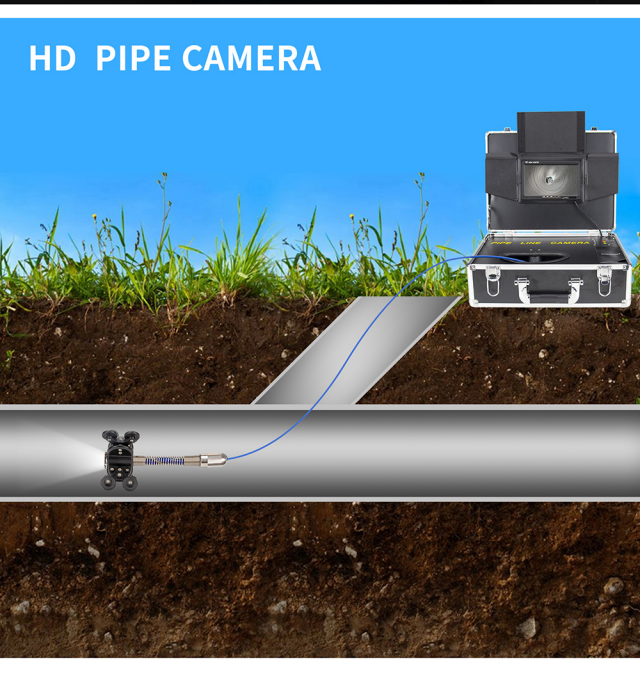

PRODUCT CONNECTION

Do not connect if power on

CHARGING

With a dedicated charger
please charge the machine with it

12V 4500MA

12.6V 1000MA

RETRACT CABLE IN THE BOX

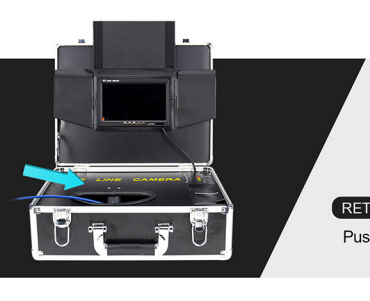

RETRACT CABLE

Push to retract cable

RELEASE CABLE

Pull to release cable

PRODUCT SIZE

LUXURY ALUMINUM CASE
PRACTICAL AND GRACEFUL

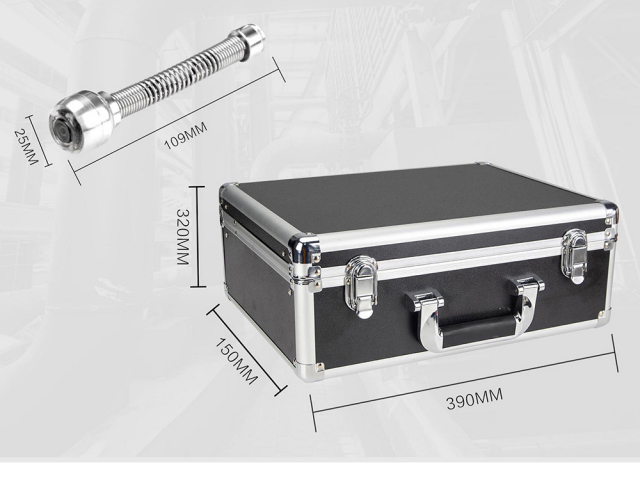

PACKING LIST

PARAMETERS

DISPLAY RESOLUTION:	1024 × 768
SENSOR:	HD SENSOR 1080P
LANGUAGE:	CHINESE, ENGLISH
VIDEO FORMAT:	AVI
PHOTO FORMAT:	JPEG
STORAGE MEDIA:	SD CARD
LED:	12PCS
LED WHITE LIGHT LITHIUM BATTERY:	12V4500MA
WHOLE MACHINE CONSUMPTION:	10W (MAX)